[Engine Compartment]

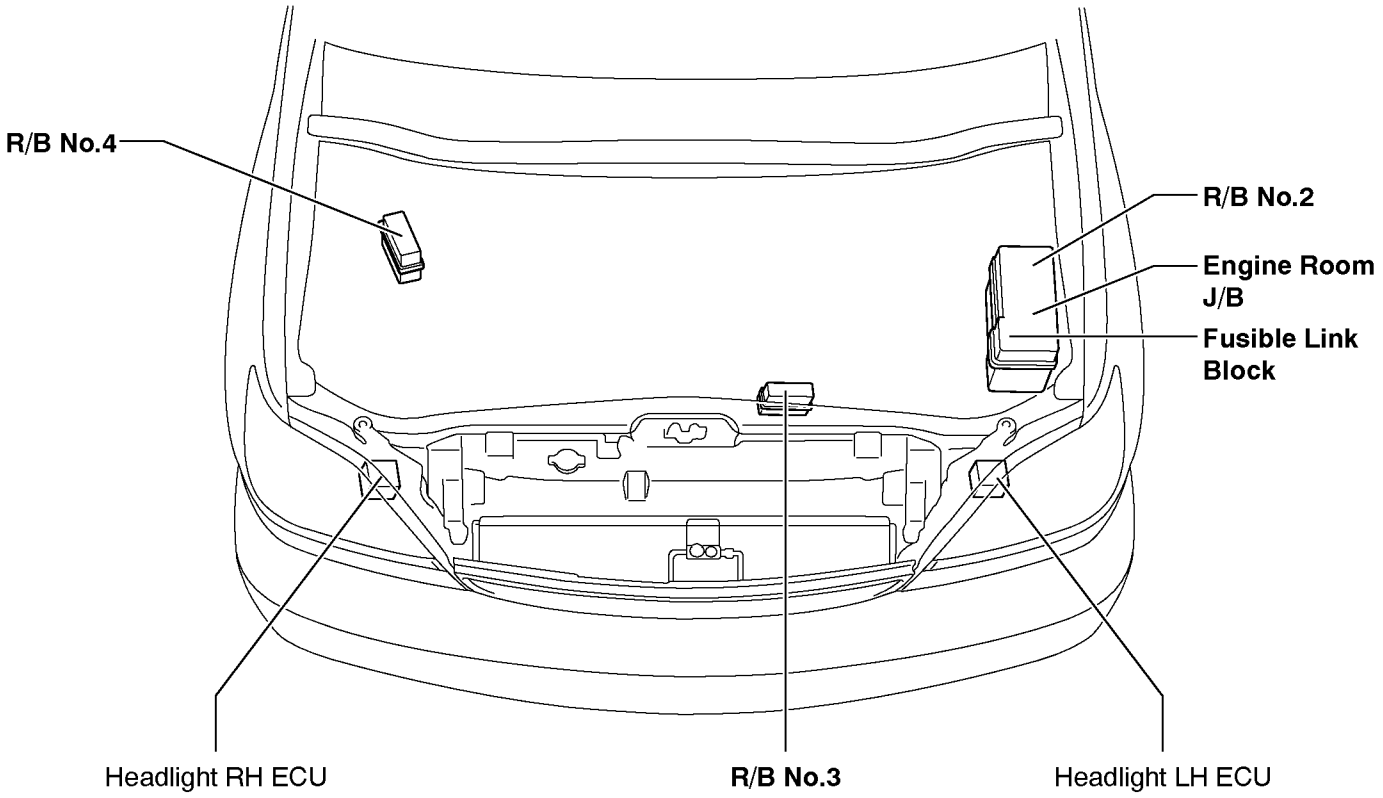

[Instrument Panel]

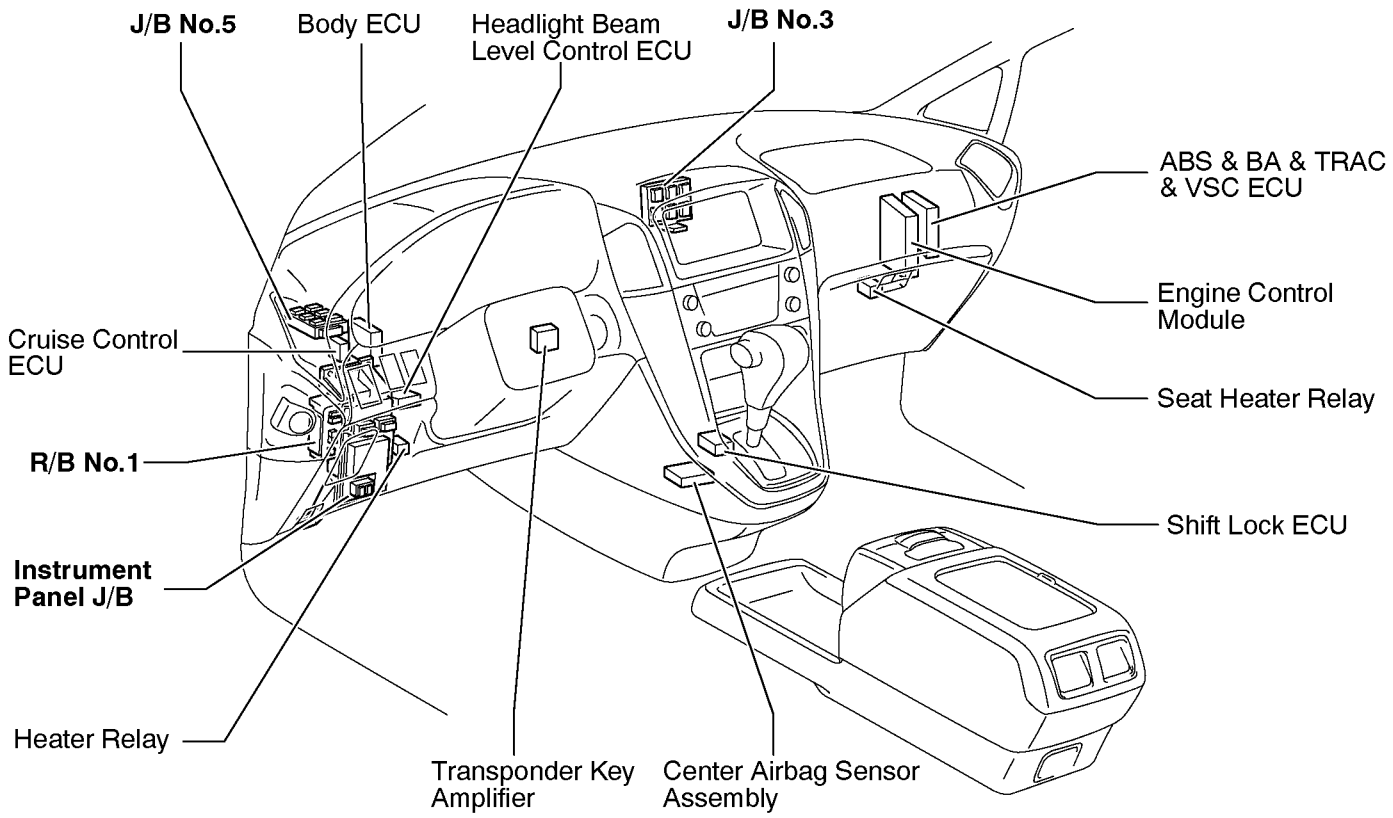

[Body]

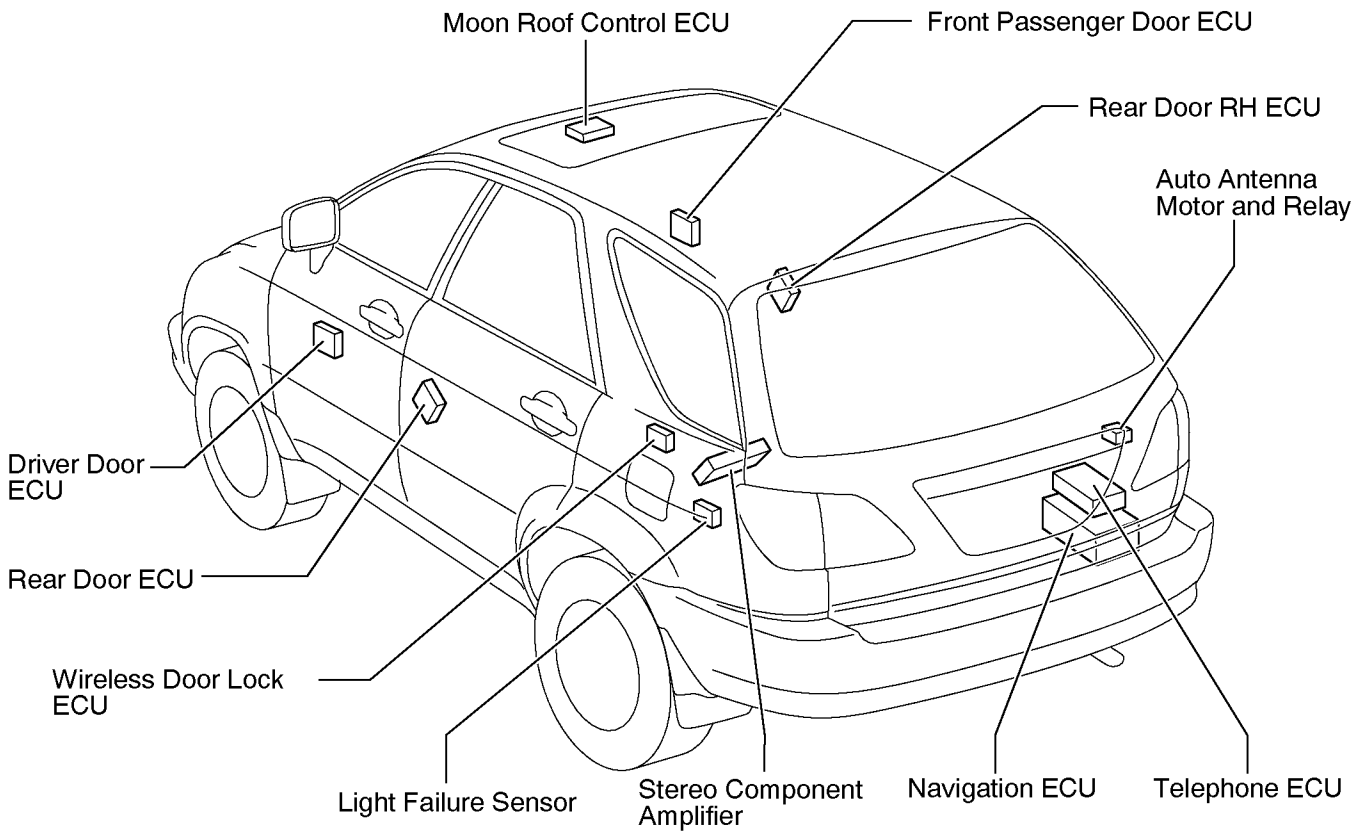
Moon Roof Control ECU
Front Passenger Door ECU
Rear Door RH ECU
Auto Antenna
Motor and Relay
Driver Door
ECU
Rear Door ECU
Wireless Door Lock
ECU
Light Failure Sensor
Stereo Component
Amplifier
Navigation ECU
Telephone ECU

[Seat]

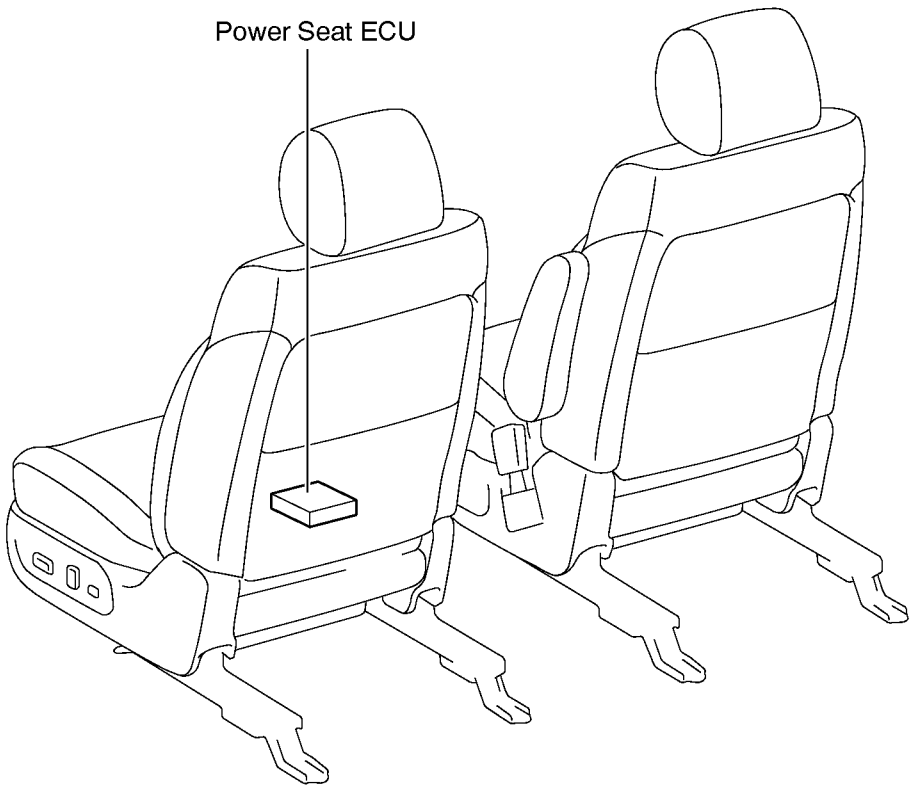
Power Seat ECU

F RELAY LOCATIONS

: Instrument Panel J/B	Lower Finish Panel (See Page 20)

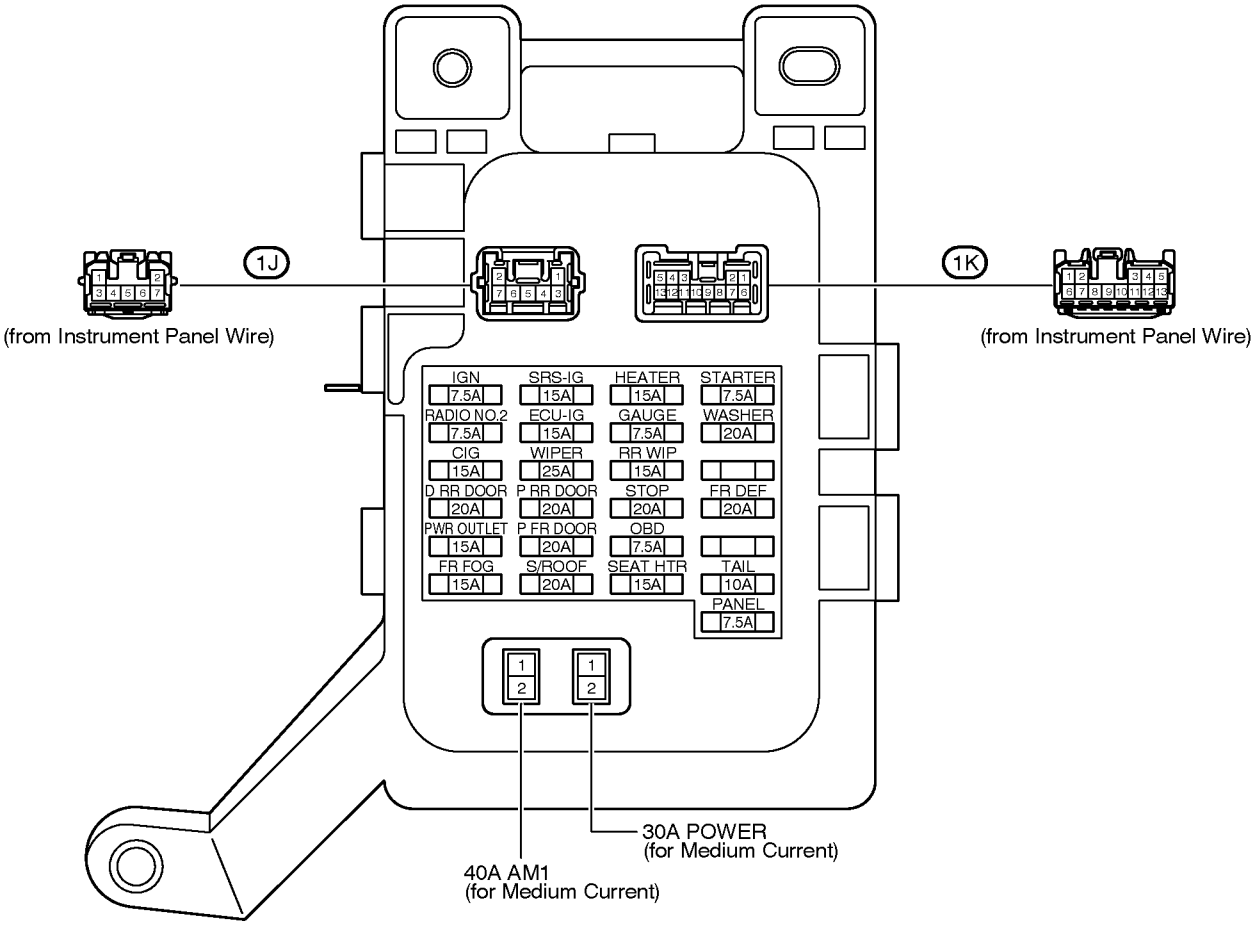

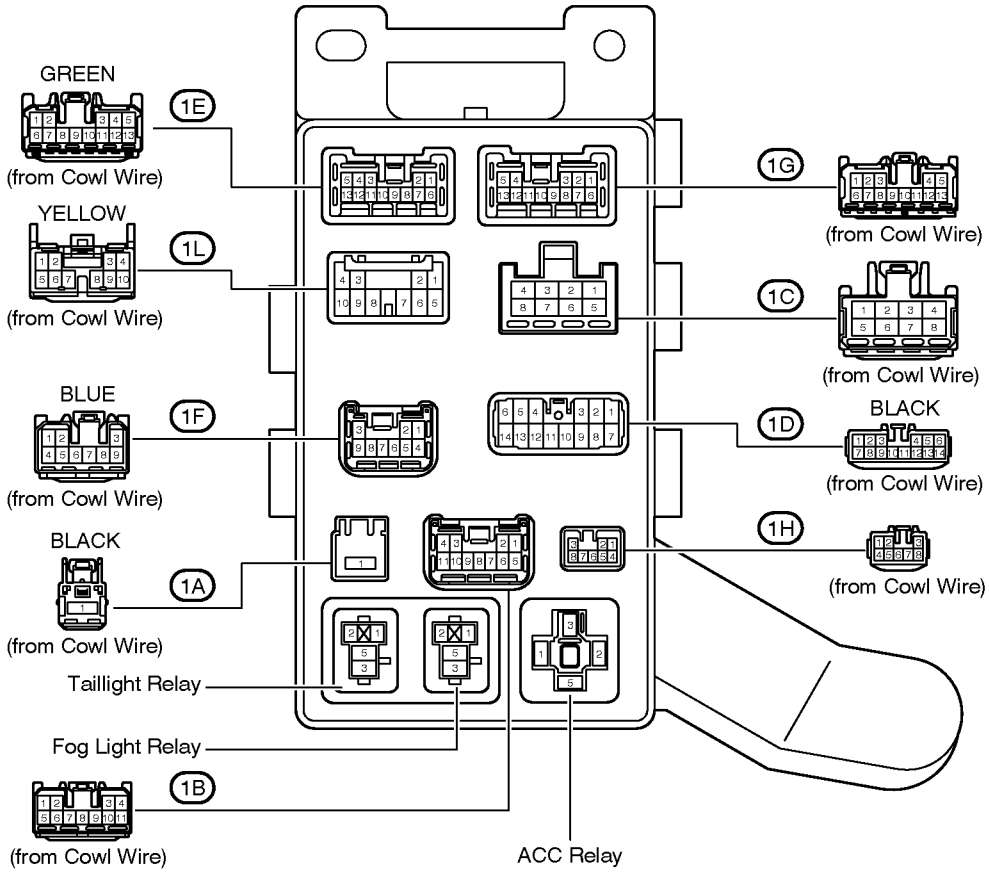

[Instrument Panel J/B Inner Circuit]

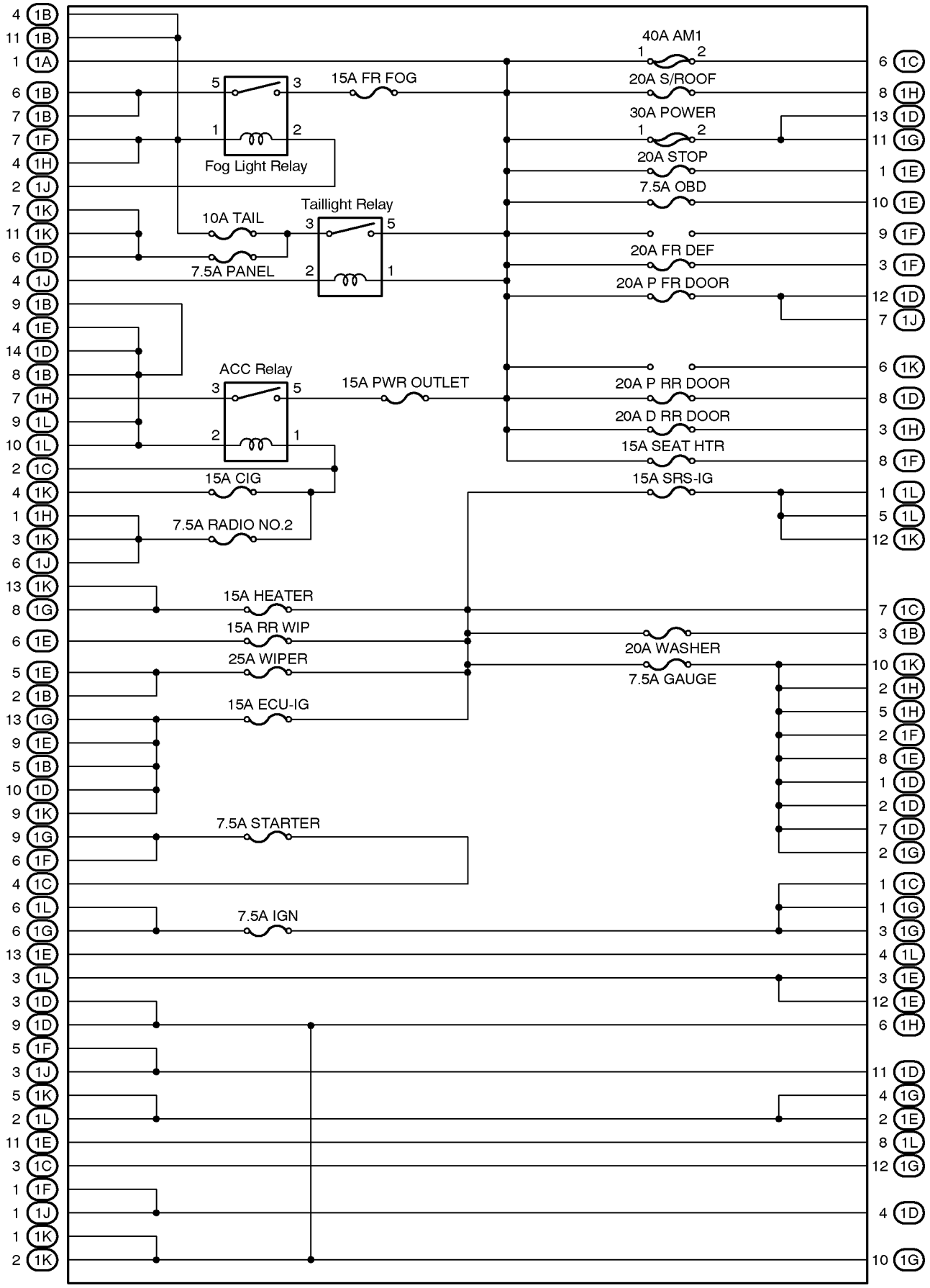

F RELAY LOCATIONS

: Engine Room J/B	Engine Compartment Left (See Page 20)

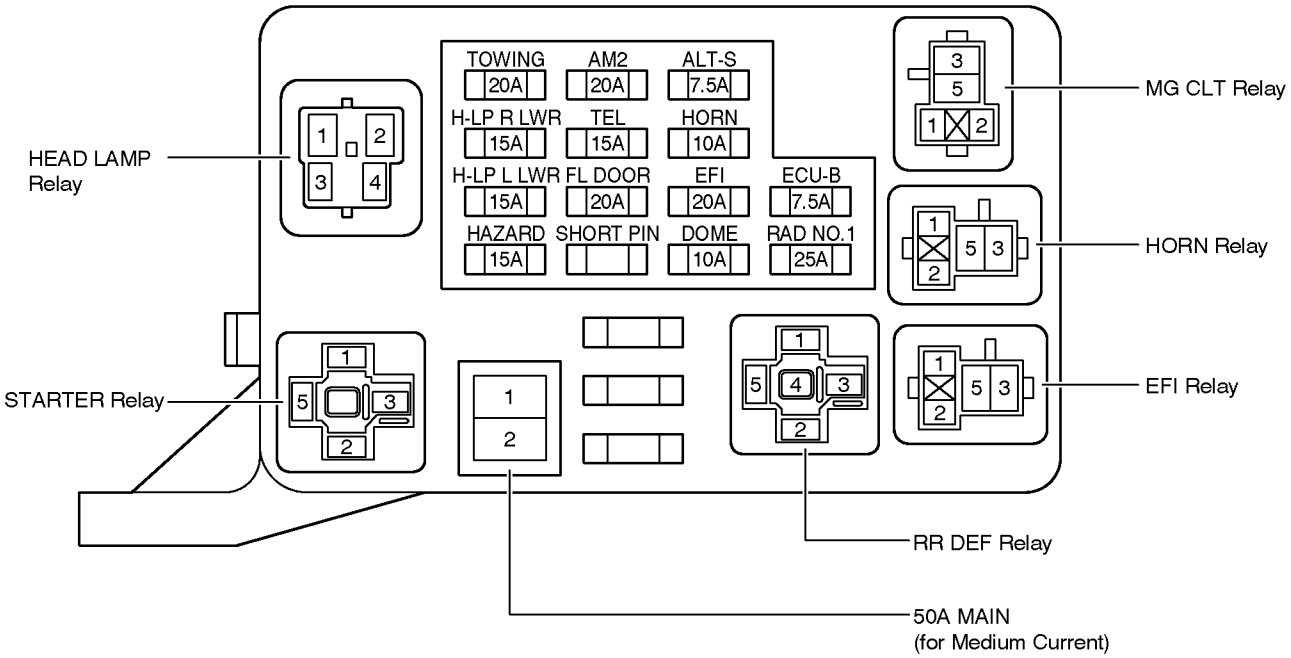

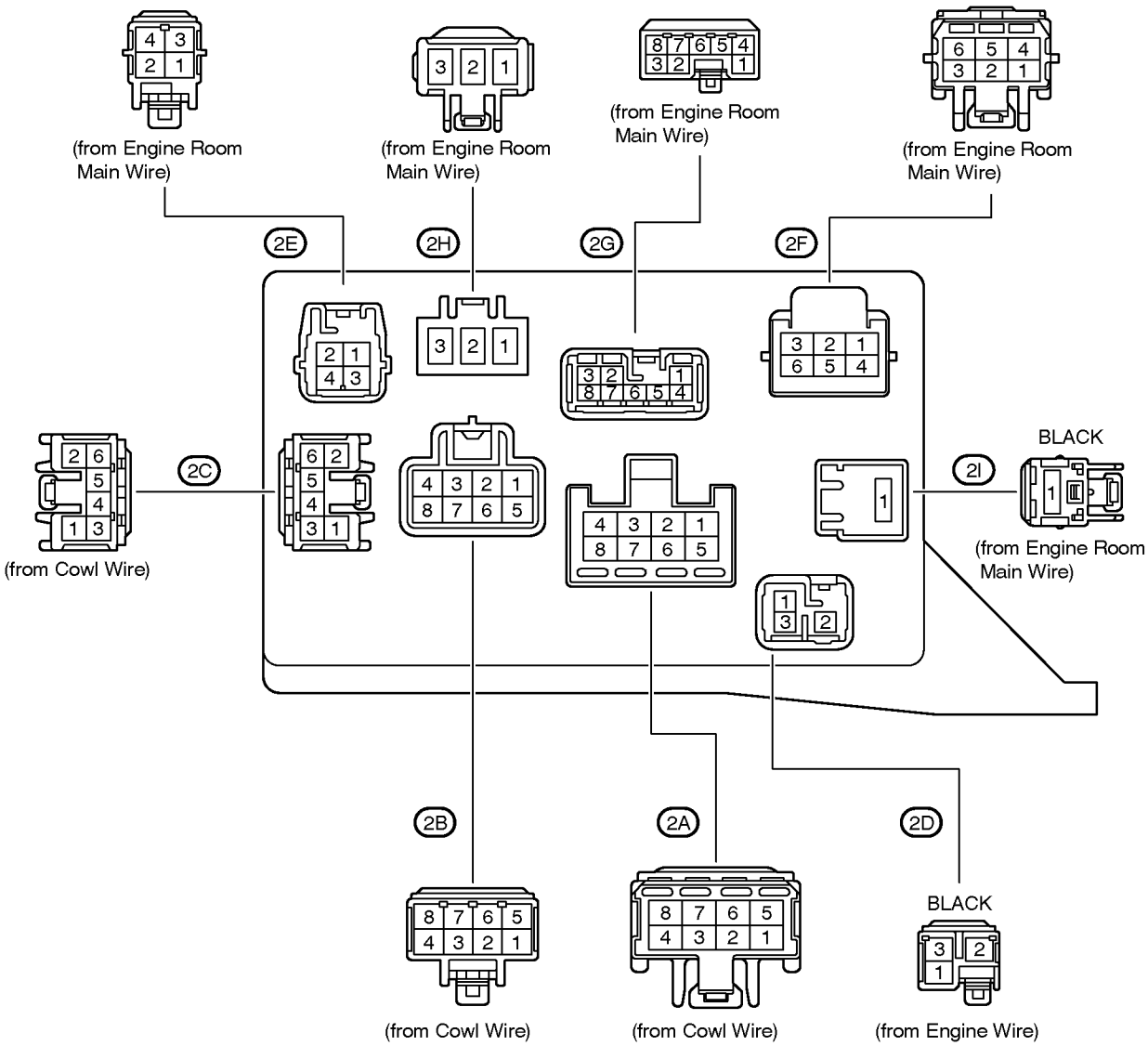

[Engine Room J/B Inner Circuit]

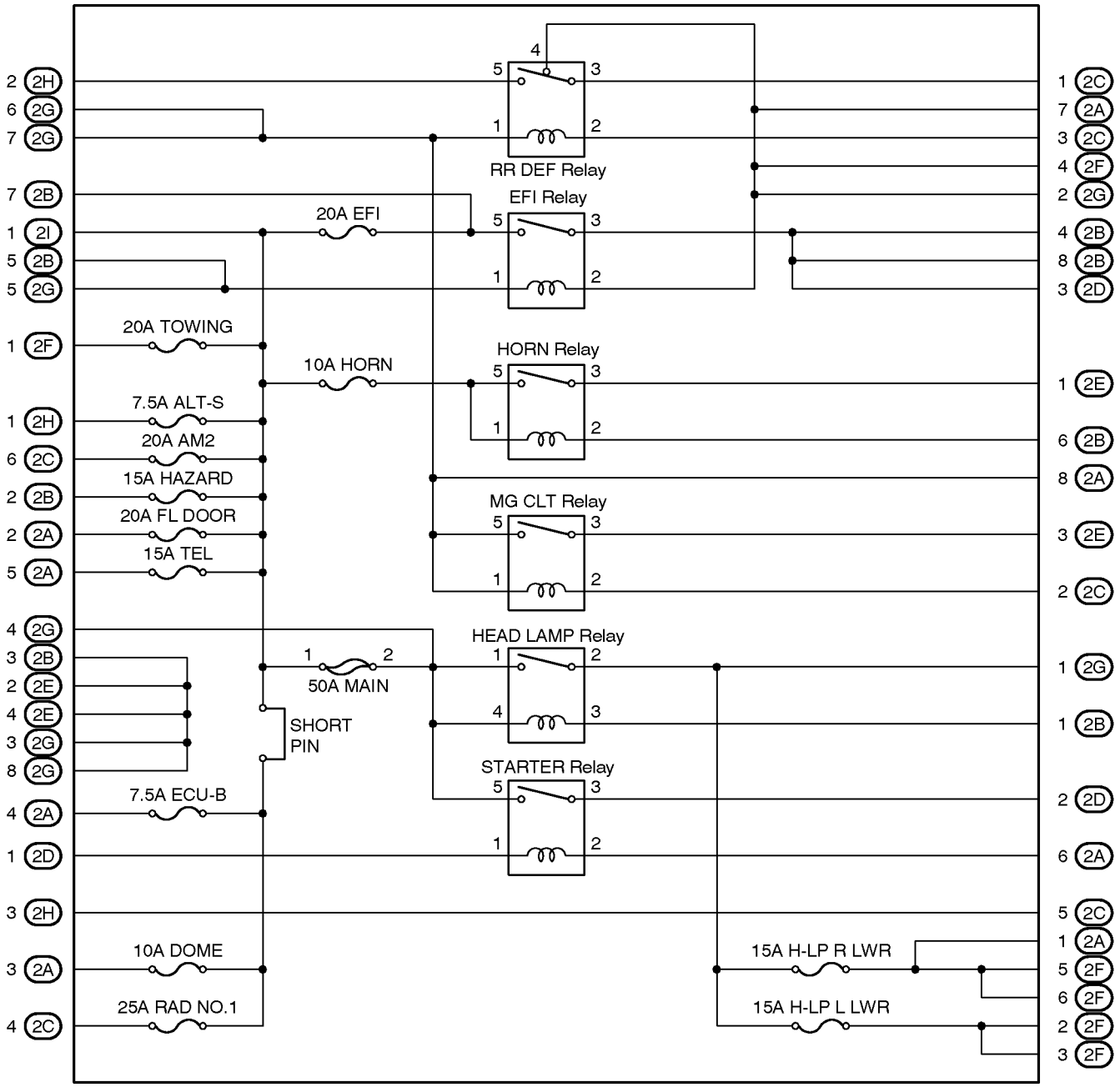

: J/B No.3	Behind the Instrument Panel Center (See Page 20)

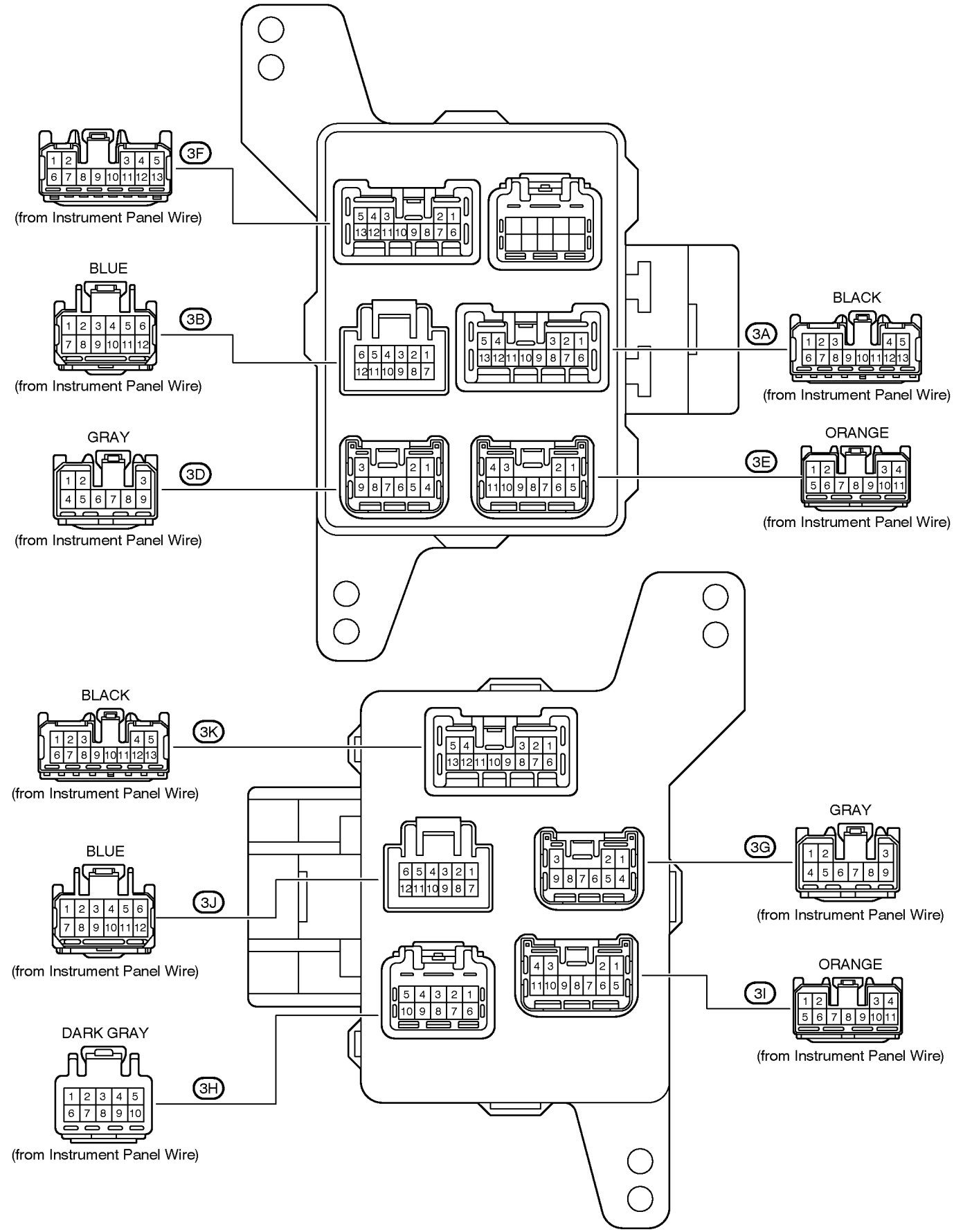

[J/B No.3 Inner Circuit]

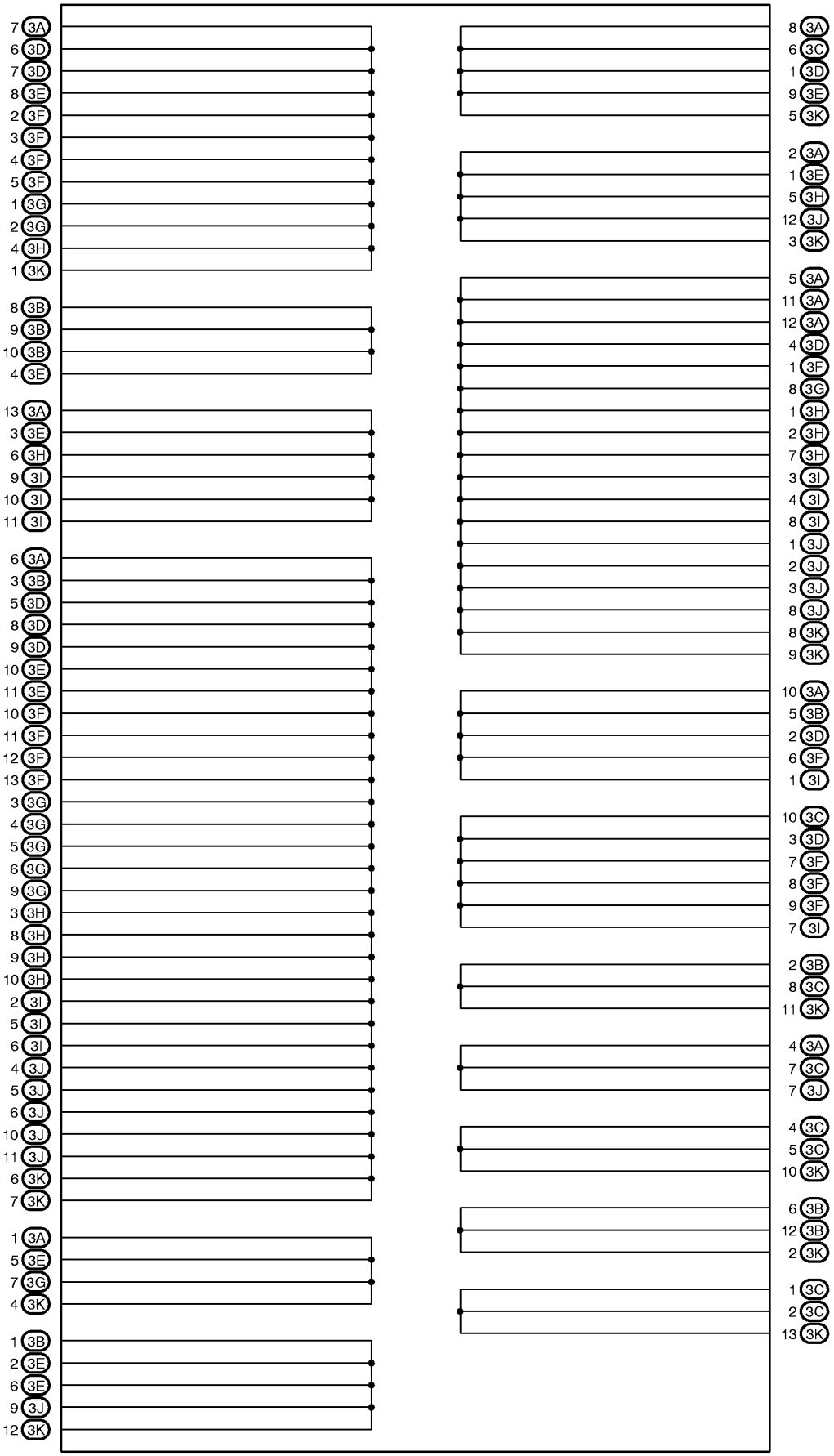

: J/B No.5	Behind the Instrument Panel Left (See Page 20)

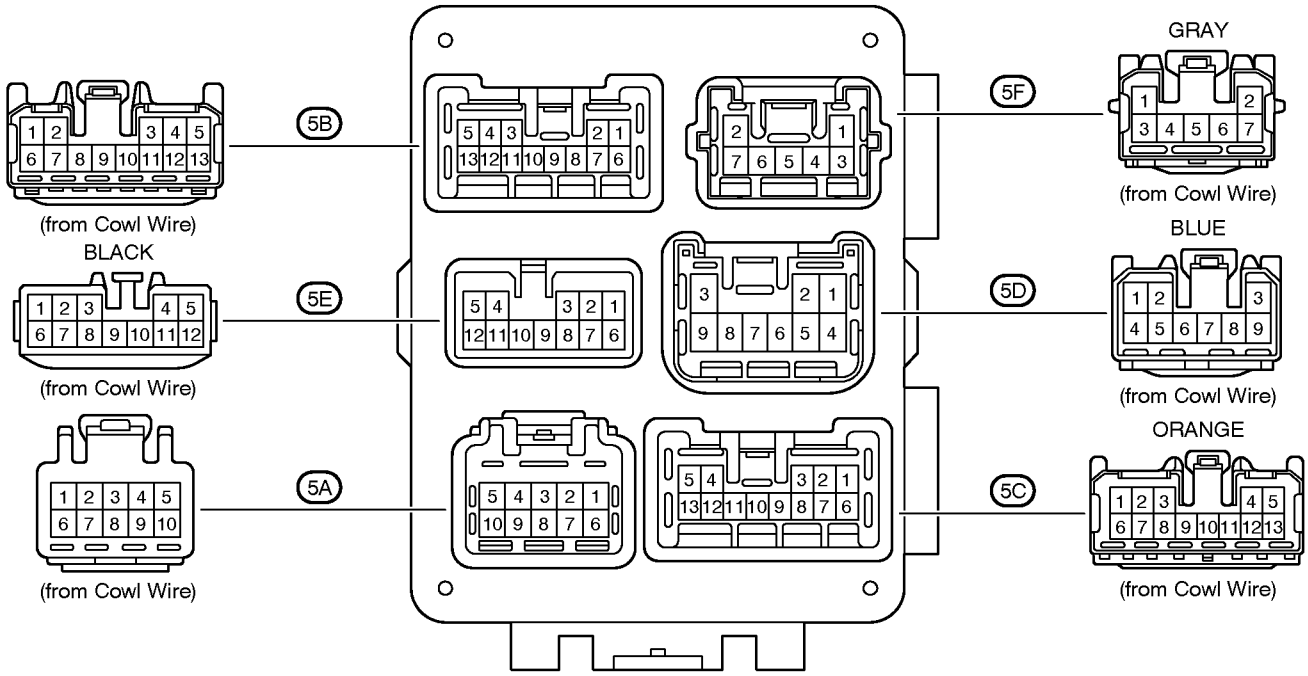

[J/B No.5 Inner Circuit]

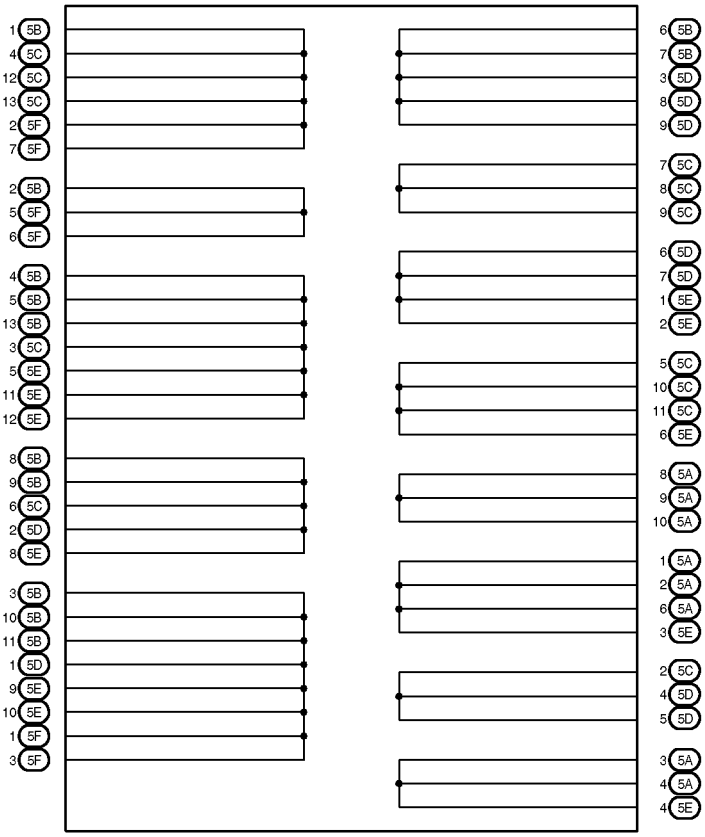

Fusible Link Block	Engine Compartment Left (See Page 20) [Inside Engine Room J/B]

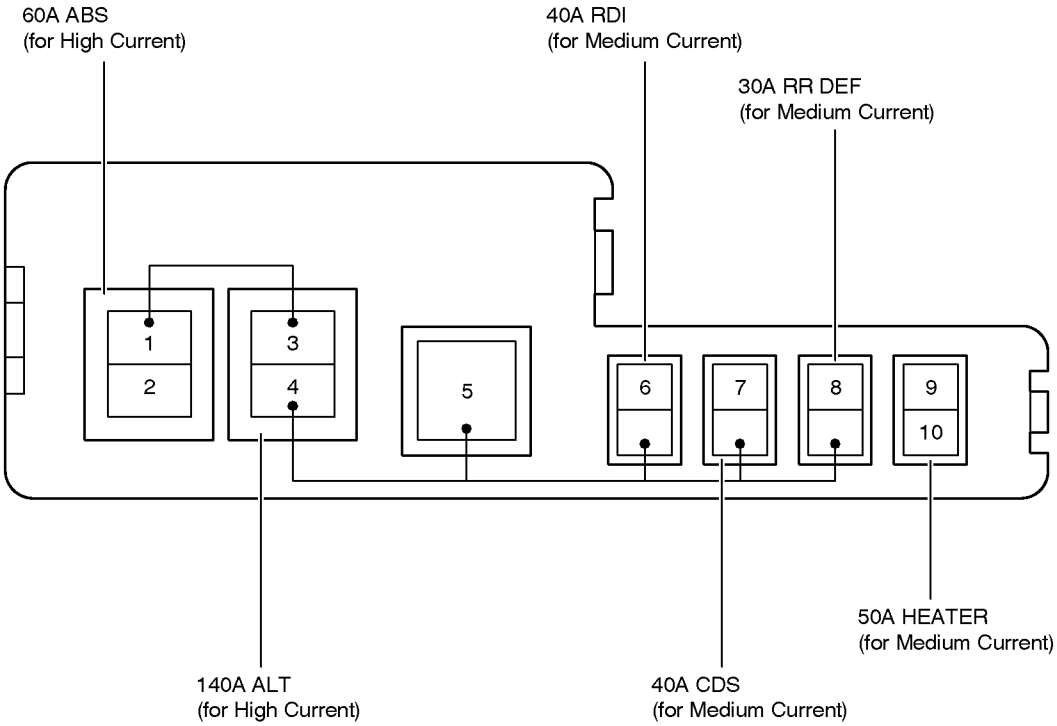

① : R/B No.1	Lower Finish Panel (See Page 20)

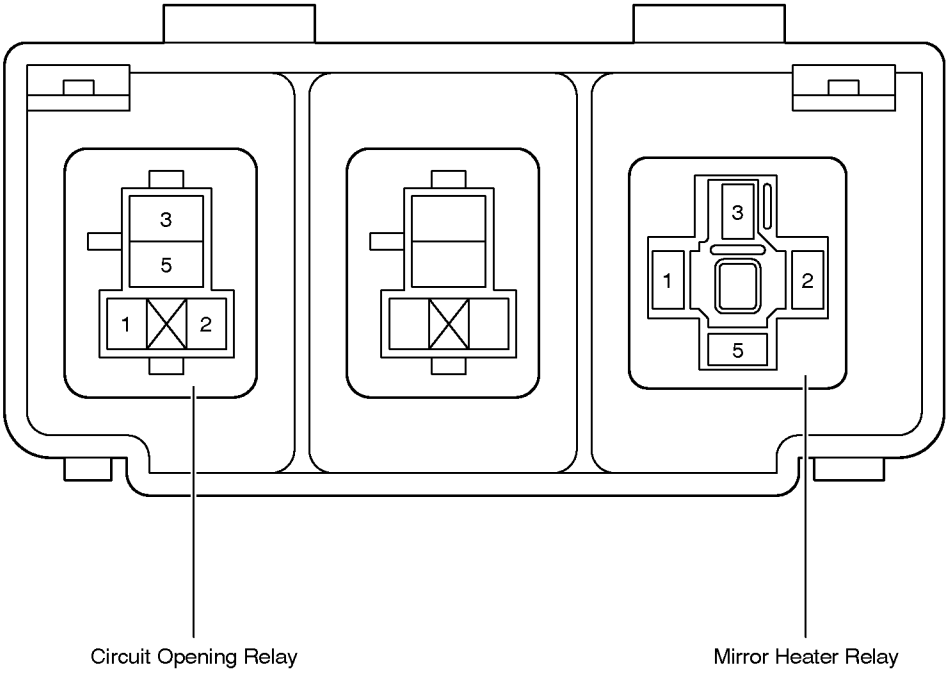

② : R/B No.2	Engine Compartment Left (See Page 20) [Inside Engine Room J/B]

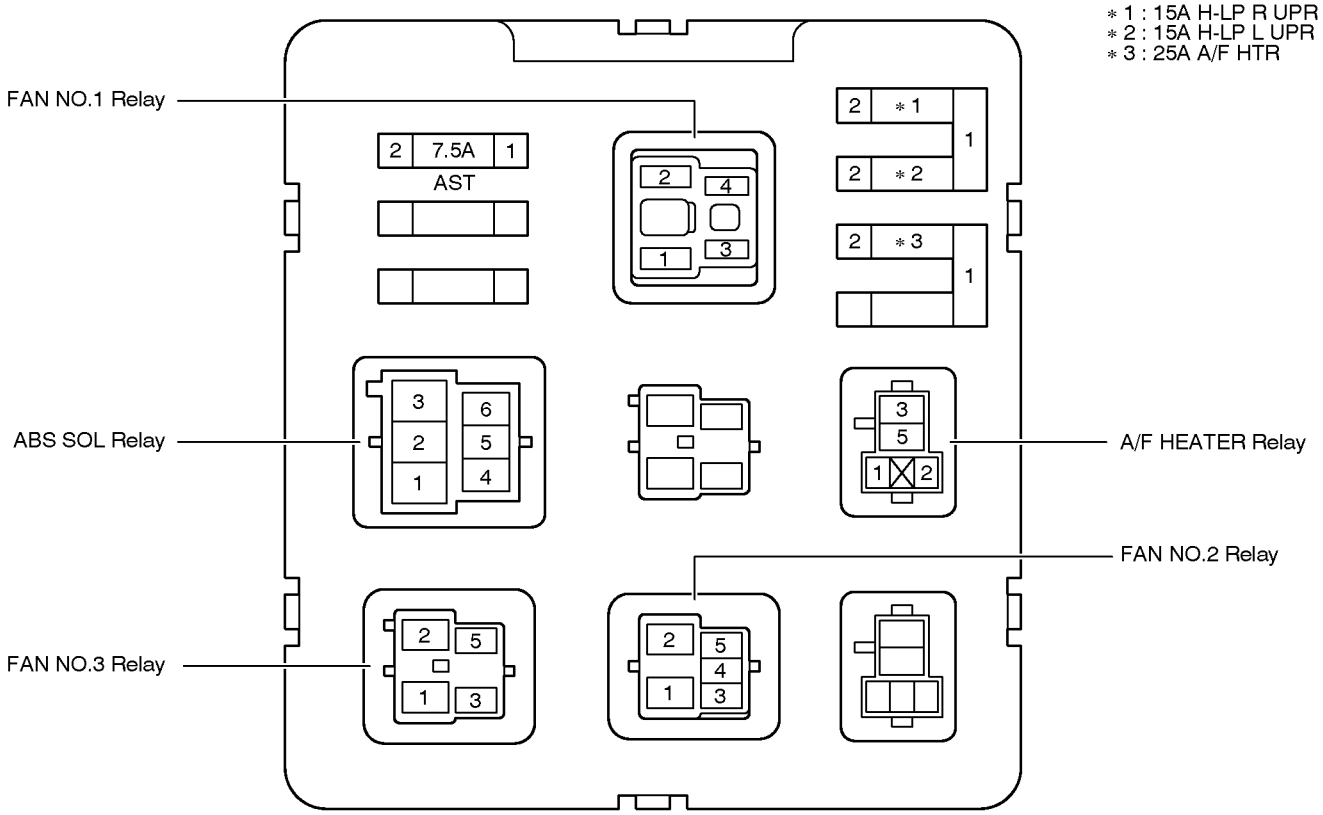

③ : R/B No.3	Engine Compartment Front Left (See Page 20)

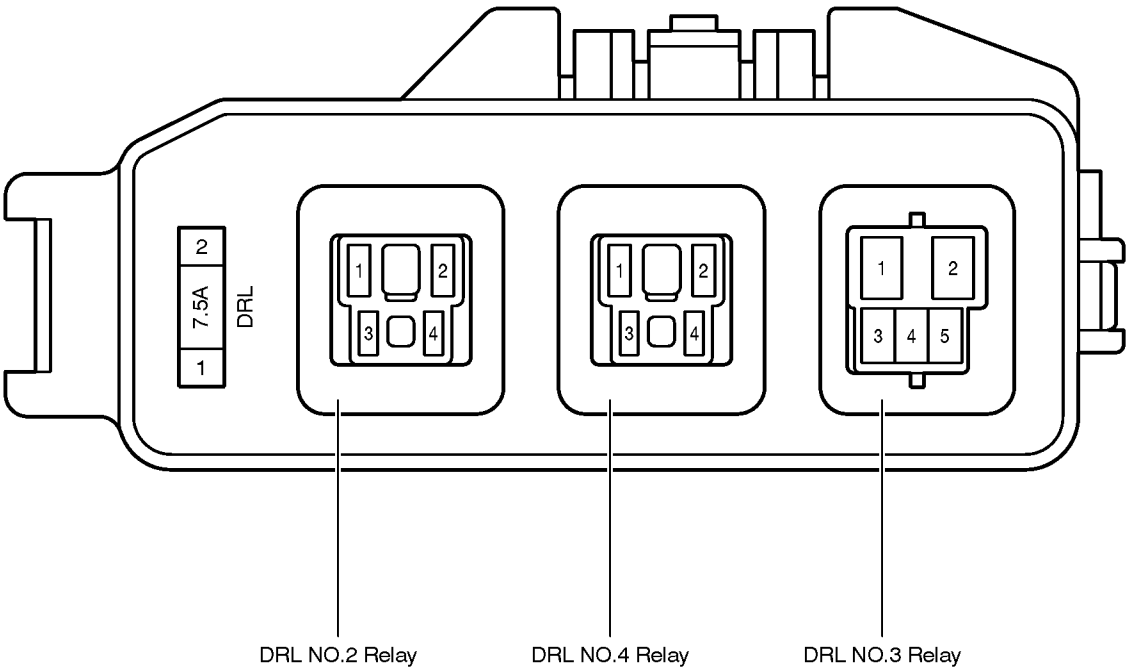
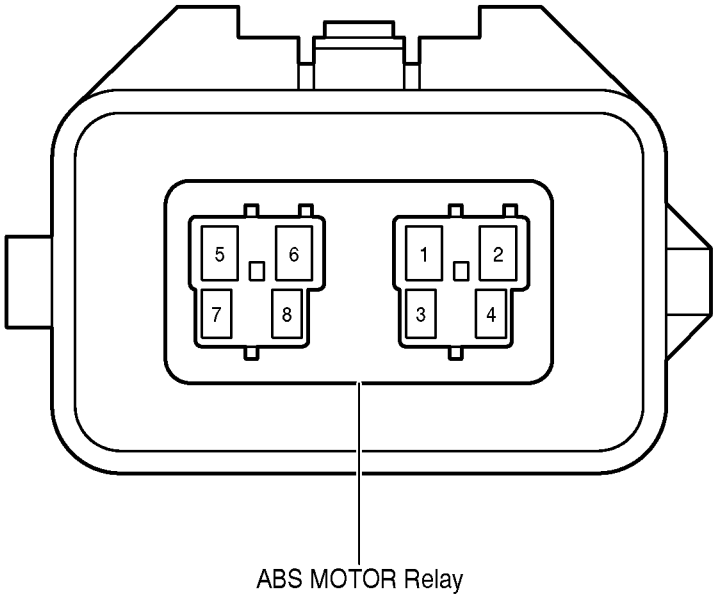
④ : R/B No.4	Engine Compartment Right (See Page 20)