P0122

DTC P0122 Throttle Position (TP) Sensor Circuit - Low Input

DTC P0122

THROTTLE POSITION (TP) SENSOR CIRCUIT - LOW INPUT

Important

- BEFORE CLEARING DTC(s) USE SCAN TOOL TO RECORD FREEZE FRAME AND FAILURE RECORDS FOR REFERENCE, AS DATA WILL BE LOST WHEN "CLEAR INFO" FUNCTION IS USED.

(1) • THROTTLE CLOSED.
DOES TECH 1 SCAN TOOL DISPLAY THROTTLE POSITION SIGNAL LESS THAN .15V (150 mV)?

- YES → (2)
- NO → DTC IS INTERMITTENT. IF NO ADDITIONAL DTCs WERE STORED, REFER TO "DIAGNOSTIC AIDS." IF ADDITIONAL DTCs WERE STORED REFER TO THOSE CHART(s).

(2) • DISCONNECT TP SENSOR.
• JUMPER CKTs 416 & 417 TOGETHER.
TECH 1 SHOULD DISPLAY THROTTLE POSITION OVER 4.0V (4000 mV).

- YES → (3) REPLACE TP SENSOR.
- NO → (4)

(4) PROBE CKT 417 WITH A TEST LIGHT CONNECTED TO BATTERY VOLTAGE.
TECH 1 SHOULD DISPLAY THROTTLE POSITION SIGNAL OVER 4.0V (4000 mV).

- YES → (5)
- NO → TP SIGNAL CIRCUIT OPEN
OR
SHORTED TO GROUND
OR
SHORTED TO THROTTLE POSITION SENSOR GROUND CIRCUIT
OR
FAULTY VCM-A CONNECTION
OR
FAULTY VCM-A*.

(5) 5V REFERENCE CIRCUIT OPEN
OR
SHORTED TO GROUND
OR
FAULTY CONNECTION
OR
FAULTY VCM-A*.

* IF THE VCM IS FAULTY, THE NEW VCM MUST BE PROGRAMMED.
REFER TO VCM SERVICE AND REPAIR

"AFTER REPAIR," USE SCAN TOOL "CLEAR INFO" FUNCTION AND ROAD TEST VEHICLE. CHECK FOR DTC(s), CURRENT OR HISTORY. REVIEW TEST STATUS INFORMATION. IF STATUS IS TEST(S) FAILED OR DTC(s) ARE PRESENT BEGIN DIAGNOSIS AGAIN, ON THAT DTC(s). IF LAST TEST FAILED IS NOT PRESENT AND NOT DTC(s) ARE PRESENT REPAIR IS COMPLETE.

10-26-94
NS 14910

An open or short to ground in CKTs 416 or 417 will result in a DTC P0122.

Throttle Position (TP) Sensor Circuit

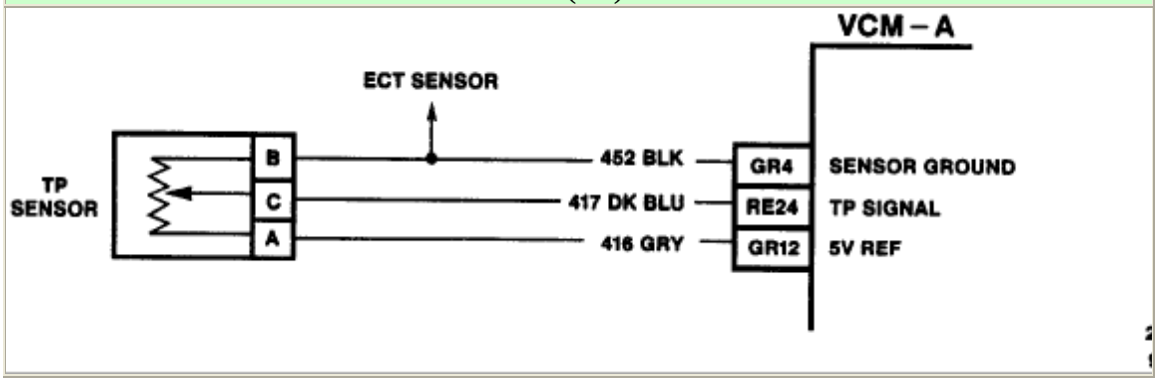

CIRCUIT DESCRIPTION
The Throttle Position **(TP)** sensor provides a voltage signal which changes relative to the throttle blade angle. Signal voltage will vary from about 0.5 volt at idle to about 4.5 volts at Wide Open Throttle **(WOT)** .

The TP signal is one of the most important inputs used by the Vehicle Control Module-A **(VCM-A)** for fuel control and for most of the VCM-A control outputs. Each time voltage drops below 1.25 volts and stops, the VCM-A assumes this value as 0 throttle angle and measures percent throttle from this point on. DTC P0122 is a type "A" DTC.

DTC PO122 WILL SET WHEN

- Key "ON," engine "OFF" **or**
- Key "ON," engine "ON" **and**
- TP sensor voltage is less than 0.15 volts.

ACTION TAKEN (VCM-A WILL DEFAULT TO)
TP 19% and the VCM-A will turn "ON" the Malfunction Indicator Lamp **(MIL)** .

NOTE: Tech 1 scan tool will not indicate default value.

DTC P0122 WILL CLEAR WHEN
The VCM-A will turn the MIL "OFF" after three consecutive trips without a fault condition present. A history DTC will be cleared if no fault conditions have been detected for forty warm-up cycles [coolant temperature has risen 22°C (40°F) from start-up coolant temperature and engine coolant temperature exceeds 71°C (160°F) that same ignition cycle] or the Tech 1 clearing feature has been used.

DTC CHART TEST DESCRIPTION
Number(s) below refer to circled number(s) on the diagnostic chart.

1. If TP signal is less than 0.15 volt, then the fault is present.
2. Simulates DTC P0123: (high voltage) - If the VCM-A recognizes the high signal voltage, the VCM-A and wiring are OK.
3. The VCM-A recognizes the voltage as over 4 volts, indicating that CKT 417 and the VCM-A are OK.
4. This simulates a high signal voltage to check for an open in CKT 417.
5. This step checks for CKT 416 open, shorted to ground, or a poor connection or faulty VCM-A.

DIAGNOSTIC AIDS
A Tech 1 scan tool reads throttle position in volts. Should read about 0.45 to 0.85 volt with throttle closed and ignition "ON" or at idle. Voltage should increase at a steady rate as throttle is moved toward Wide Open Throttle **(WOT).**

An open or short to ground in CKTs 416 or 417 will result in a DTC P0122.

Refer to Intermittents. See: Symptom Related Diagnostic Procedures\Intermittent Condition

Scan TP signal while depressing accelerator pedal with engine stopped and ignition "ON." Display should vary from below 1.25 volts (1250 mV) when throttle was closed, to over 4.5 volts (4500 mV) when throttle is held at Wide Open Throttle **(WOT)** position.