DTC P1665 Evaporative Emission (EVAP) Vent Solenoid Control Circuit

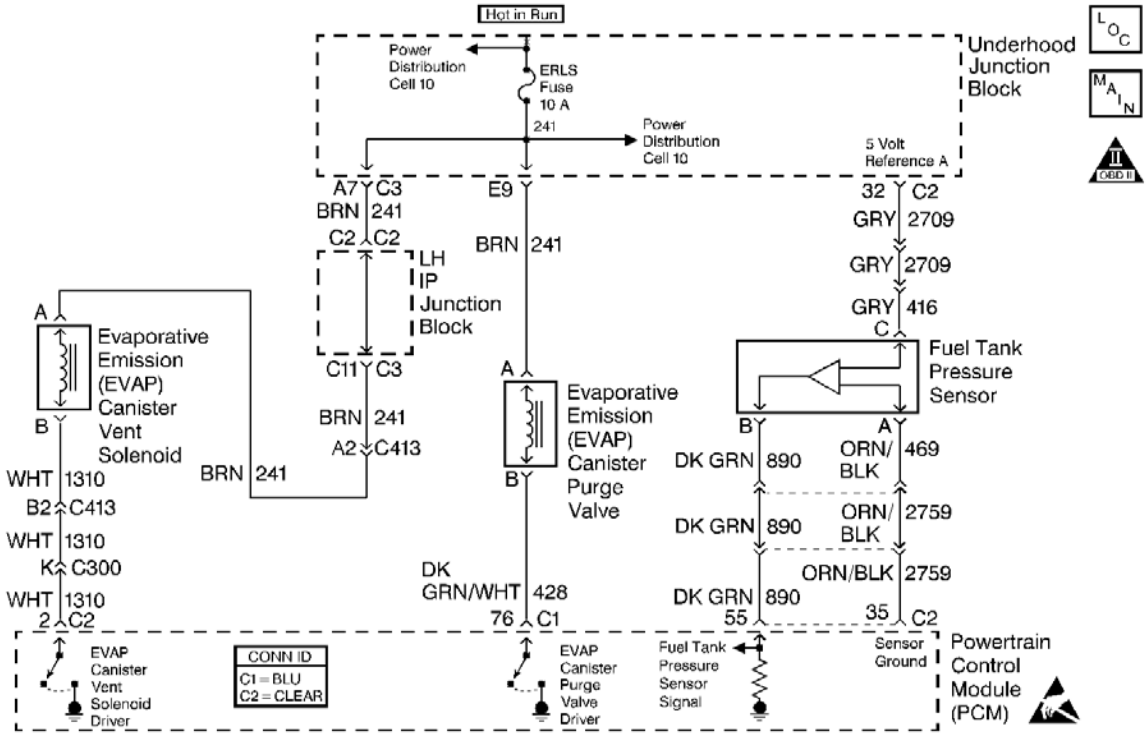

Circuit Description

Output Driver Modules (ODMs) are used by the PCM to turn on many of the current-driven devices that are needed to control various engine and Transmission functions. Each ODM is capable of controlling up to 7 separate outputs by applying ground to the device which the PCM is commanding ON. DTC P1665 set indicates an improper voltage level has been detected on the output circuit which controls the EVAP Canister Vent Solenoid Valve.

Conditions for Running the DTC

The ignition is ON.

Conditions for Setting the DTC

- An improper voltage level has been detected on the output circuit which controls the EVAP Canister Vent Solenoid Valve.
- The above conditions are present for at least 30 seconds.

Action Taken When the DTC Sets

- The PCM will illuminate the MIL during the second consecutive trip in which the diagnostic test has been run

and failed.
- The PCM will store conditions which were present when the DTC set as Freeze Frame and Fail Records data.

Conditions for Clearing the MIL/DTC

- The PCM will turn the MIL OFF during the third consecutive trip in which the diagnostic has been run and passed.
- The history DTC will clear after 40 consecutive warm-up cycles have occurred without a malfunction.
- The DTC can be cleared by using the scan tool Clear Info function or by disconnecting the PCM battery feed.

Diagnostic Aids

Check for the following conditions:

- Poor connection at the PCM. Refer to Intermittents and Poor Connections Diagnosis in Wiring Systems. Inspect harness connectors for backed out terminals, improper mating, broken locks, improperly formed or damaged terminals, and poor terminal to wire connection. Refer to Intermittents and Poor Connections Diagnosis in Wiring Systems.
- Damaged harness. Refer to Wiring Repairs in Wiring Systems. Inspect the wiring harness for damage. If the harness appears to be OK, disconnect the PCM, turn the ignition ON and observe a digital multimeter connected between the cruise control inhibit control circuit and ground at the PCM harness connector while moving connectors and wiring harnesses related to the stepper motor cruise control module. A change in voltage will indicate the location of the malfunction. Refer to Wiring Repairs in Wiring Systems.

Reviewing the Fail Records vehicle mileage since the diagnostic test last failed may help determine how often the condition that caused the DTC to be set occurs. This may assist in diagnosing the condition.

Test Description

The numbers below refer to the step numbers on the diagnostic table.

1. The powertrain OBD System Check prompts you to complete some basic checks and store the freeze frame and failure records data on the scan tool.

2. Listen for an audible click when the Vent solenoid operates. Command both the ON and OFF states. Repeat the commands as necessary.

3. Tests for voltage at the feed side of the solenoid.

4. Verifies that the PCM is providing ground to the solenoid.

5. Tests if ground is constantly being applied to the solenoid.

12. The PCM utilizes Electrically Erasable Programmable Read Only Memory (EEPROM). When the PCM is replaced, the new PCM must be programmed.

Step	Action	Values	Yes	No
1	Did you perform the Powertrain On-Board Diagnostic (OBD) System Check?	--	Go to Step 2	Go to Powertrain On Board Diagnostic (OBD) System Check
2	1. Turn ON the ignition, with the engine OFF. 2. With a scan tool, command the Vent solenoid ON and OFF.	--	Go to Diagnostic	

	Does the solenoid turn ON and OFF with each command?		Aids	Go to Step 3
3	1. Turn OFF the ignition. 2. Disconnect the solenoid. 3. Turn ON the ignition, with the engine OFF. 4. Probe the feed circuit of the solenoid with a J 34142-B test lamp that is connected to a good ground. Does the test lamp illuminate?	--	Go to Step 4	Go to Step 10
4	1. Connect a test lamp between the control circuit of the solenoid and the feed circuit of the solenoid. 2. With a scan tool, command the Vent solenoid ON and OFF . Does the test lamp turn ON and OFF with each command?	--	Go to Step 8	Go to Step 5
5	Does the test lamp remain illuminated with each command?	--	Go to Step 7	Go to Step 6
6	Test the control circuit of the solenoid for a short to voltage or an open. Refer to Wiring Repairs in Wiring Systems. Did you find and correct the condition?	--	Go to Step 13	Go to Step 9
7	Test the control circuit of the solenoid for a short to ground. Refer to Wiring Repairs in Wiring Systems. Did you find and correct the condition?	--	Go to Step 13	Go to Step 9
8	Inspect for poor connections at the solenoid. Refer to *Testing for Intermittent and Poor Connections* and Connector Repairs in Wiring Systems. Did you find and correct the condition?	--	Go to Step 13	Go to Step 11
9	Inspect for poor connections at the harness connector of the PCM. Refer to *Testing for Intermittent and Poor Connections* and Connector Repairs in Wiring Systems. Did you find and correct the condition?	--	Go to Step 13	Go to Step 12
10	Repair the feed circuit of the solenoid. Refer to Wiring Repairs in Wiring Systems. Did you complete the repair?	--	Go to Step 13	--
11	Replace the solenoid. Refer to *EVAP Vent Valve Replacement* . Did you complete the replacement?	--	Go to Step 13	--
12	**Important** Perform the set up procedure for the PCM. Replace the PCM. Refer to PCM Replacement/Programming . Did you complete the replacement?	--	Go to Step 13	--
13	1. Use the scan tool in order to clear the DTCs . 2. Operate the vehicle within the Conditions for Running the DTC as specified in the supporting text.	--		

	Does the DTC reset?		Go to Step 2	System OK