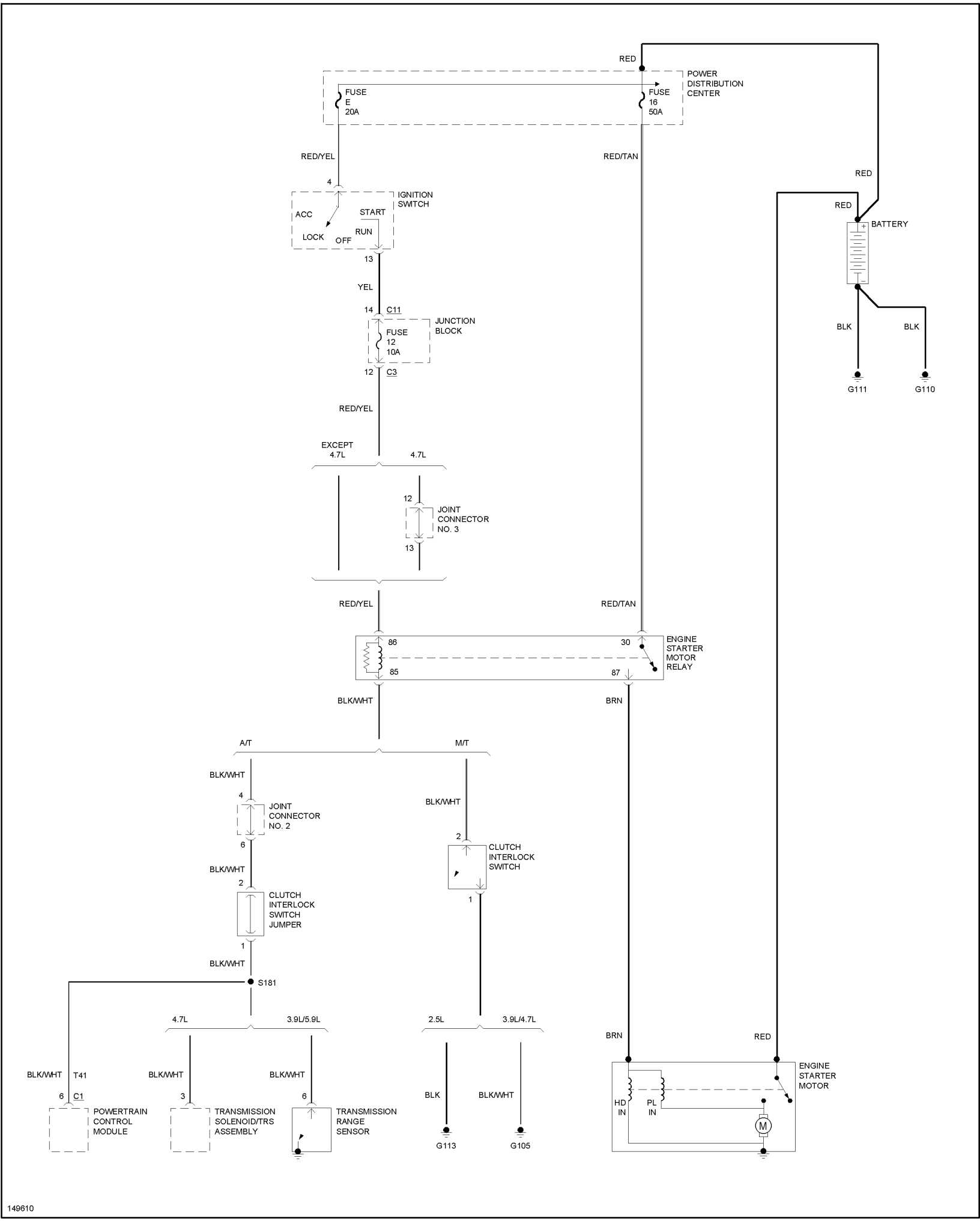
RED
POWER DISTRIBUTION CENTER
FUSE E 20A
FUSE 16 50A
RED/YEL
RED/TAN
4
IGNITION SWITCH
ACC
START
LOCK
OFF
RUN
13
YEL
14
C11
JUNCTION BLOCK
FUSE 12 10A
12
C3
RED/YEL
EXCEPT 4.7L
4.7L
12
JOINT CONNECTOR NO. 3
13
RED/YEL
RED/TAN
86
30
ENGINE STARTER MOTOR RELAY
85
87
BLK/WHT
BRN
A/T
M/T
BLK/WHT
4
JOINT CONNECTOR NO. 2
6
BLK/WHT
2
CLUTCH INTERLOCK SWITCH JUMPER
1
BLK/WHT
S181
BLK/WHT
2
CLUTCH INTERLOCK SWITCH
1
4.7L
3.9L/5.9L
2.5L
3.9L/4.7L
BLK/WHT
T41
6
C1
POWERTRAIN CONTROL MODULE
BLK/WHT
3
TRANSMISSION SOLENOID/TRS ASSEMBLY
BLK/WHT
6
TRANSMISSION RANGE SENSOR
BLK
G113
BLK/WHT
G105
BRN
RED
HD IN
PL IN
M
ENGINE STARTER MOTOR
RED
RED
BATTERY
BLK
BLK
G111
G110
149610